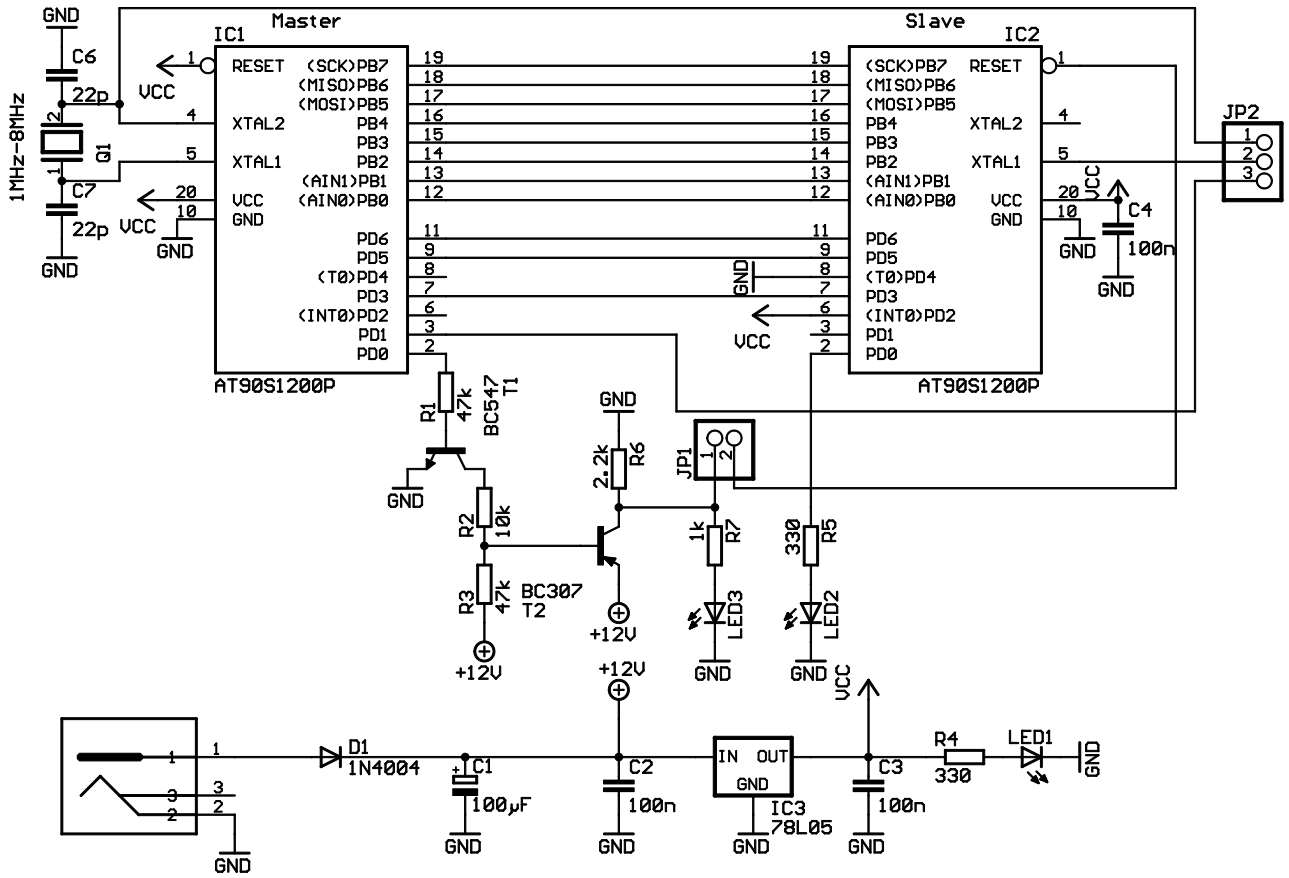

DK5JG / DL5NEG 5/2004

TITLE: rcen_blower

Document Number: RCEN-Blower

REV:

Date: 7/05/2004 06:39:21

Sheet: 1/1