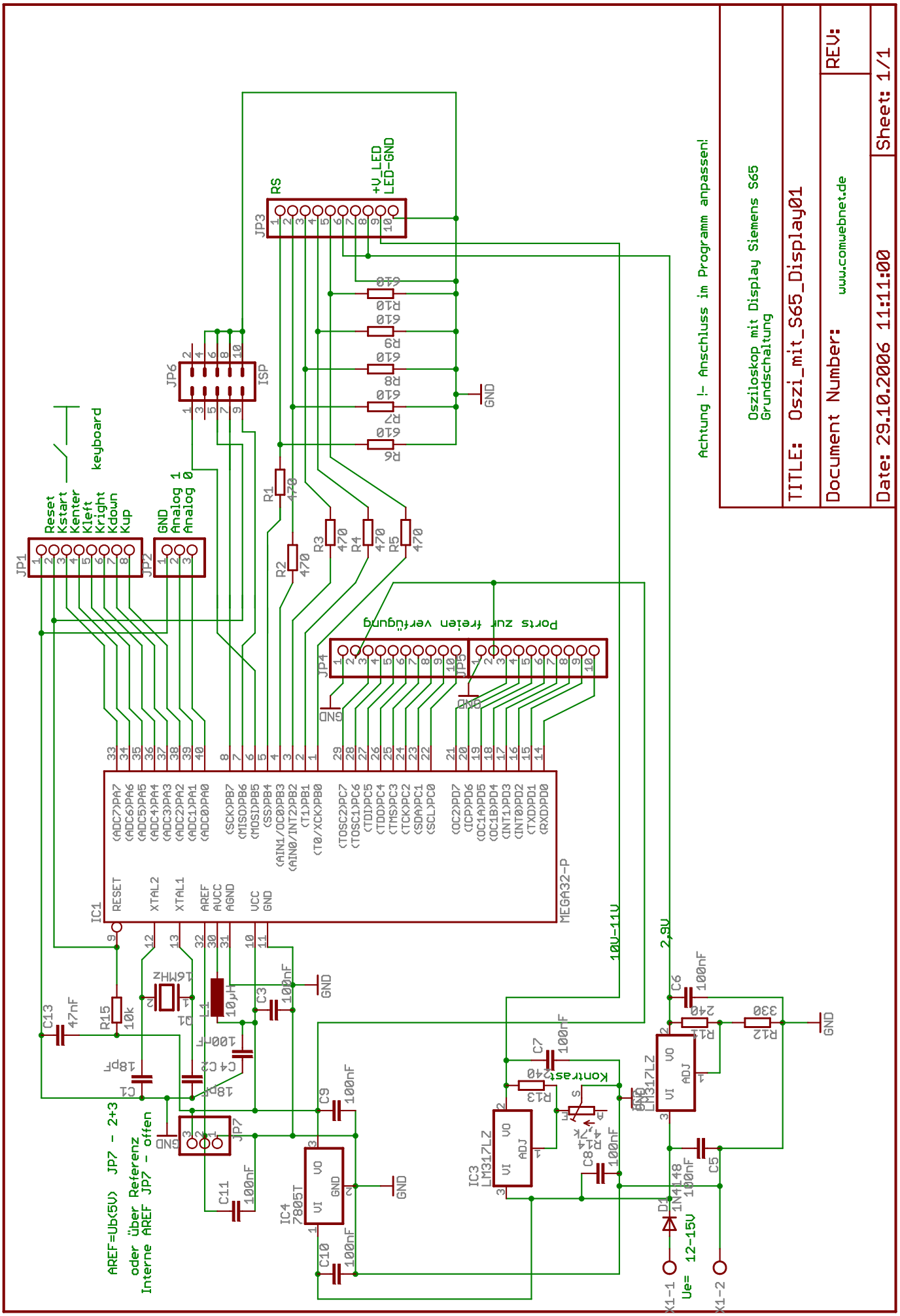
Oszi_mit_S65_Display01
Oszilloskop mit Display Siemens S65
Grundschaltung
Document Number:
www.comwebnet.de
REV:
Sheet: 1/1
Date: 29.10.2006 11:11:00
Achtung !- Anschluss im Programm anpassen!
JP3
RS
+V LED
LED-GND
JP6
ISP
JP1
Reset
Kstart
Kenter
Kleft
Kright
Kdown
Kup
keyboard
JP2
GND
Analog 1
Analog 0
Ports zur freien verfügung
JP4
JP5
IC1
MEGA32-P
RESET
XTAL2
XTAL1
AREF
AVCC
AGND
VCC
GND
(ADC7)PA7
(ADC6)PA6
(ADC5)PA5
(ADC4)PA4
(ADC3)PA3
(ADC2)PA2
(ADC1)PA1
(ADC0)PA0
(SCK)PB7
(MISO)PB6
(MOSI)PB5
(SS)PB4
(AIN1/OC0)PB3
(AIN0/INT2)PB2
(T1)PB1
(T0/XCK)PB0
(TOSC2)PC7
(TOSC1)PC6
(TDI)PC5
(TDO)PC4
(TMS)PC3
(TCK)PC2
(SDA)PC1
(SCL)PC0
(OC2)PD7
(ICP)PD6
(OC1A)PD5
(OC1B)PD4
(INT1)PD3
(INT0)PD2
(TXD)PD1
(RXD)PD0
R1 470
R2 470
R3 470
R4 470
R5 470
R6 610
R7 610
R8 610
R9 610
R10 610
C13 47nF
R15 10k
Q1 16MHz
L1 10µH
C3 100nF
C1 18pF
C4 C2 18pF
100nF
JP7
AREF=Ub(5V) JP7 - 2+3
oder über Referenz
Interne AREF JP7 - offen
C11 100nF
IC4 7805T
C10 100nF
C9 100nF
IC3 LM317LZ
R13 240
Kontrast
P1
C7 100nF
C8 100nF
10V-11V
2,9V
C6 100nF
R11 240
R12 330
LM317LZ
C5 100nF
D1 1N4148
X1-1
Ue= 12-15V
X1-2

www.cadsoftusa.com
+5V
VREF
P5

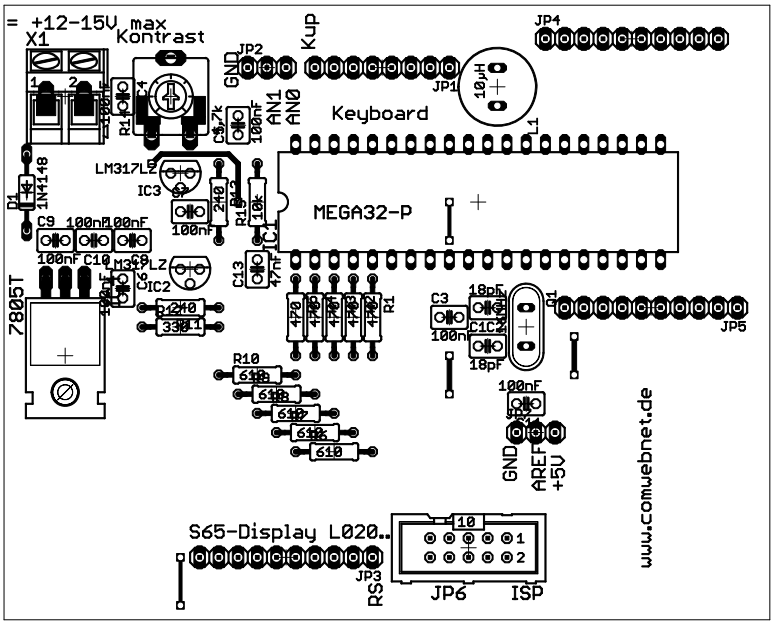
= +12-15V max
X1
Kontrast
JP2
GND
Kup
JP4
JP1
10µH
L1
AN1
AN0
Keyboard
MEGA32-P
LM317LZ
IC3
D1
1N4148
C9 100nF
C10 100nF
7805T
IC2
IC1
C13
47nF
R1
C3
100nF
18pF
C1
C2
JP5
R10
610
GND
AREF
+5V
www.comwebnet.de
S65-Display L020..
JP3
RS
JP6
ISP

+12-15V max
X1
Kontrast
JP2
GND
VCC
Keyboard
JP1
LM317L2
IC3
MEGA32-P
7805
C6 100nF
100nF
C10
47nF
R10
610
JP5
ISP
GND
VCC
+5V
S65-Display 1.020...
JP6
ISP
www.comwebnet.de
www.comwebnet.de