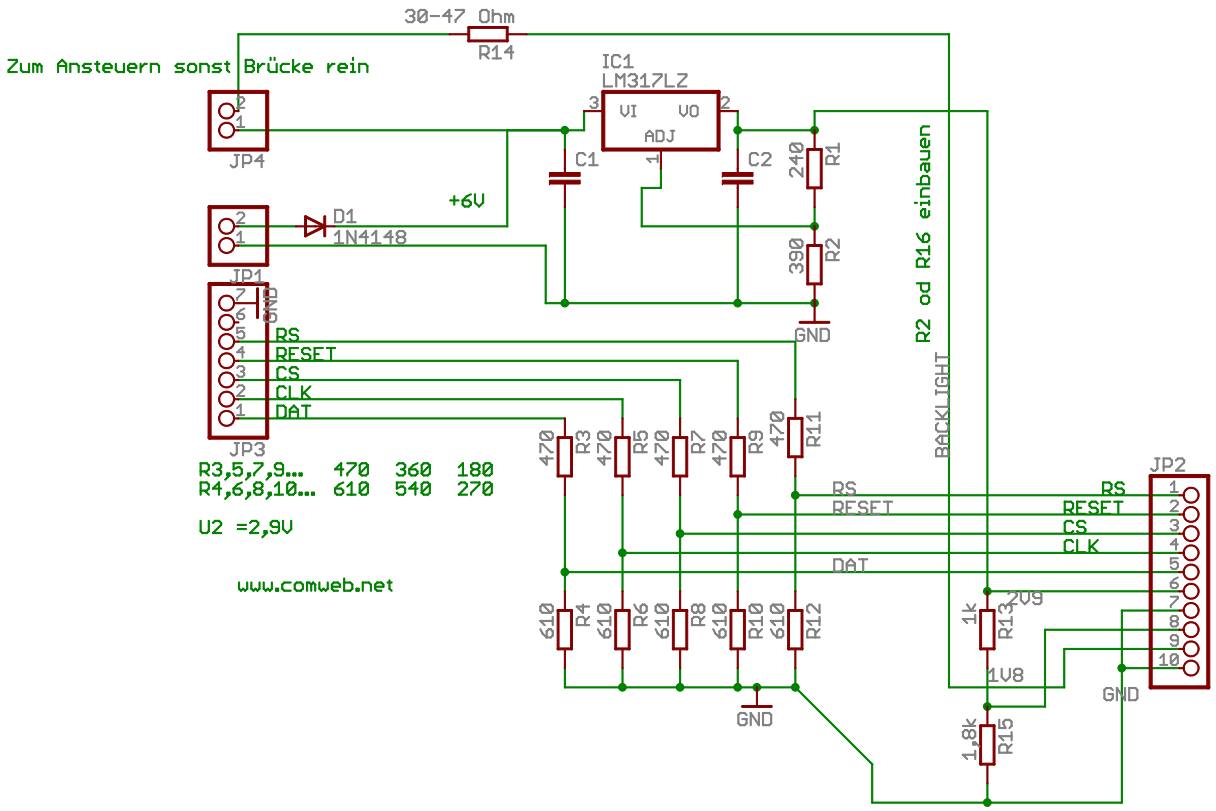
30-47 Ohm
R14
Zum Ansteuern sonst Brücke rein
IC1
LM317LZ
VI
VO
ADJ
JP4
C1
C2
240
R1
390
R2
+6V
D1
1N4148
JP1
GND
RS
RESET
CS
CLK
DAT
JP3
470
R3
R5
R7
R9
R11
R2 od R16 einbauen
BACKLIGHT
R3,5,7,9... 470 360 180
R4,6,8,10... 610 540 270
U2 =2,9V
www.comweb.net
610
R4
R6
R8
R10
R12
1k
R13
2V9
1V8
1,8k
R15
JP2

565 Disp Interface
GND
HDM 2006
www
comwebnet.de
+
-

S65-Interface
www.comwebnet.de
JP1
JP2
JP3
S65
1N4148
R1
240
R2
390
C2
R4
0Ω
R11
470
470
470